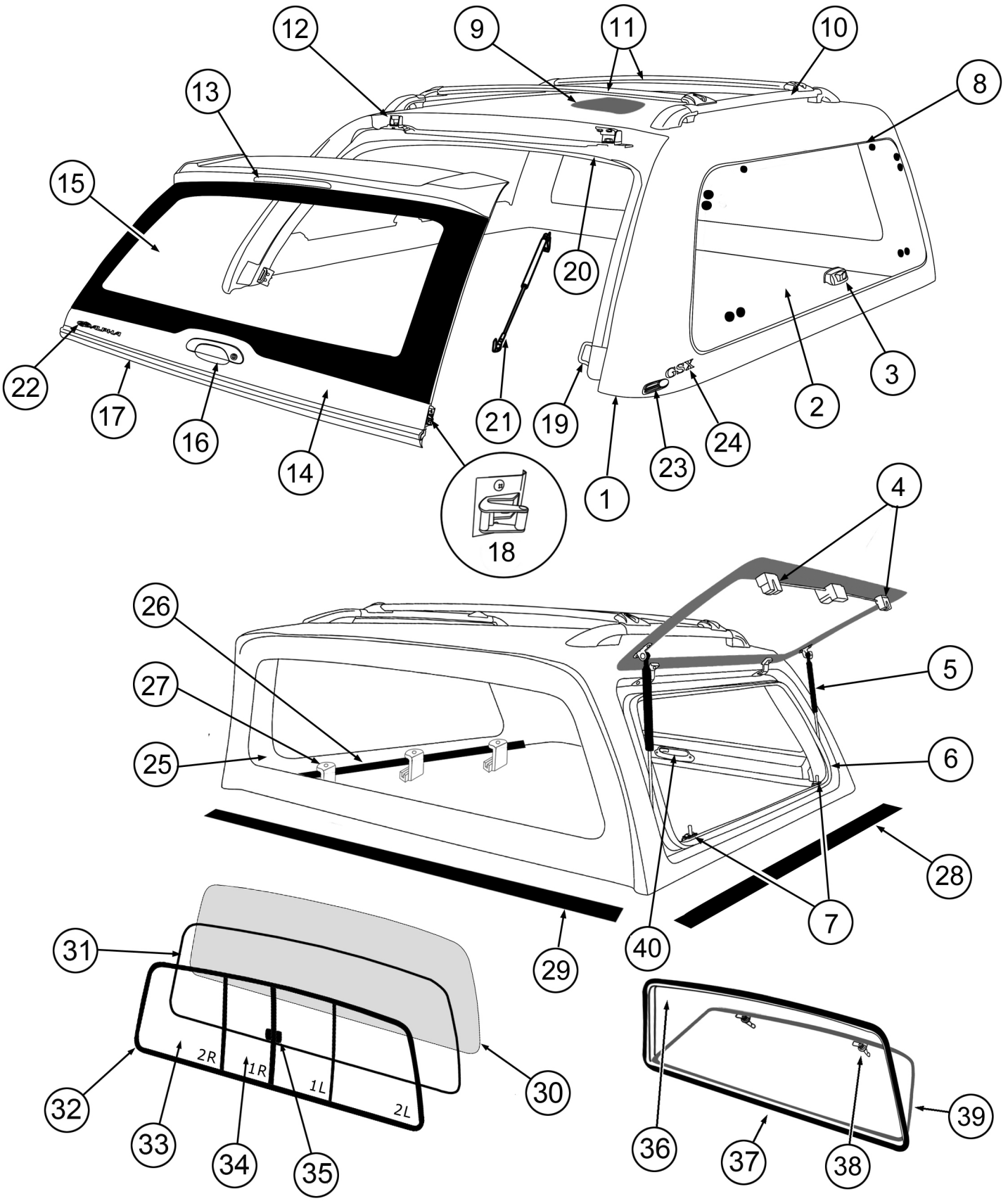PART LIST FOR GSX CANOPY